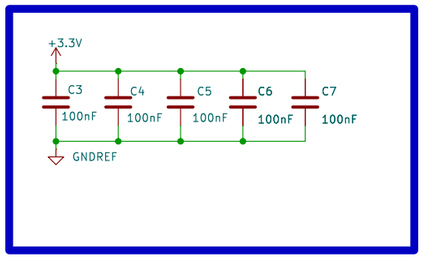

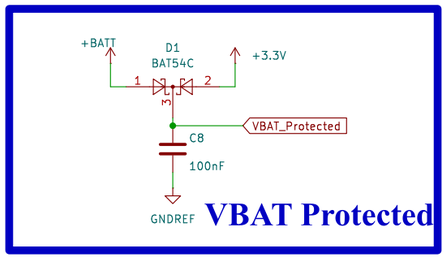

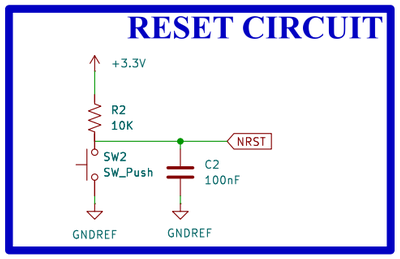

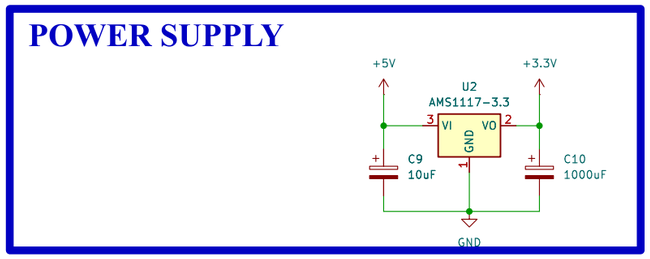

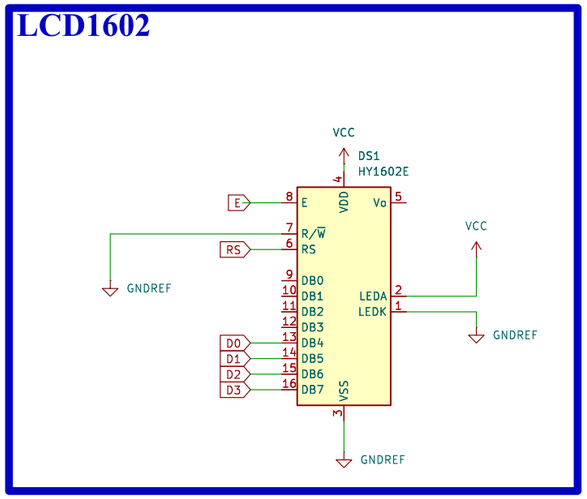

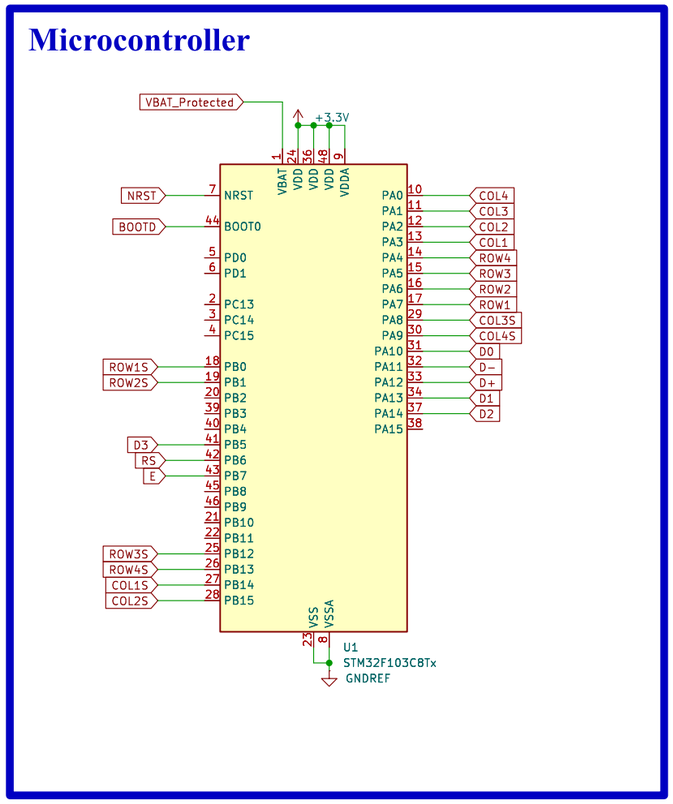

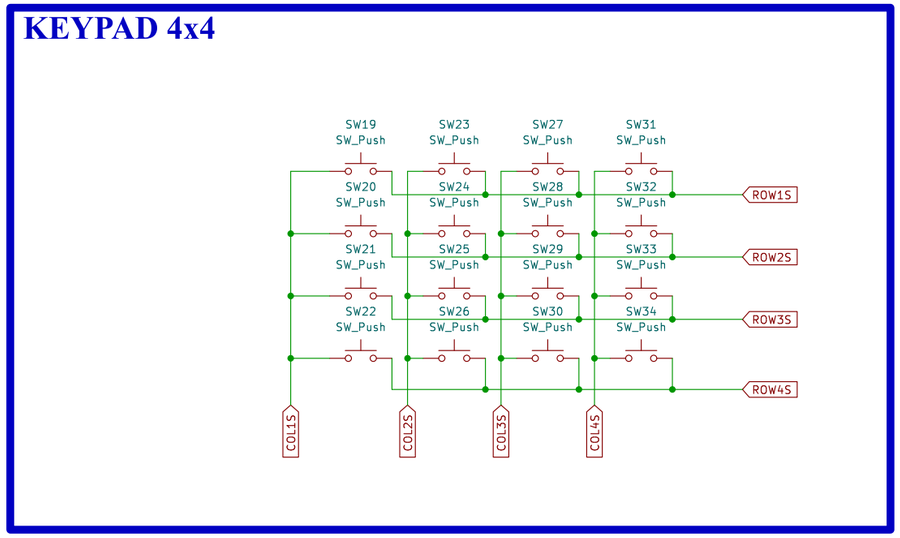

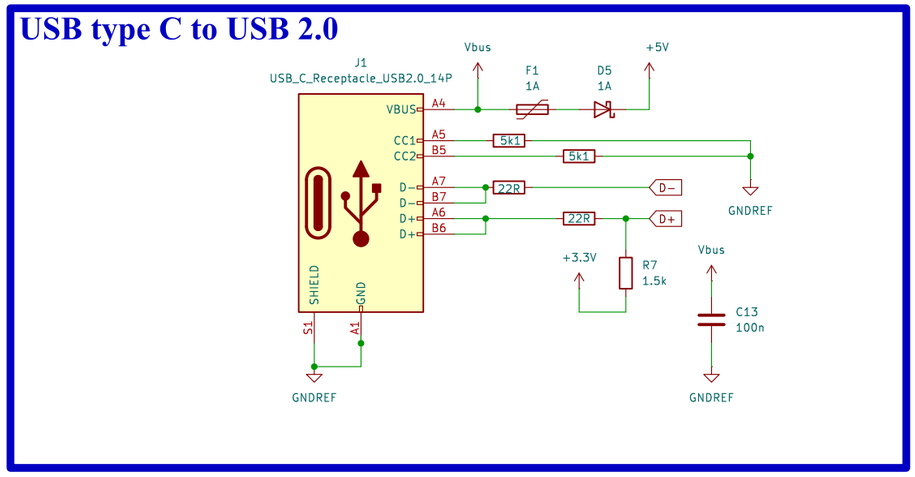

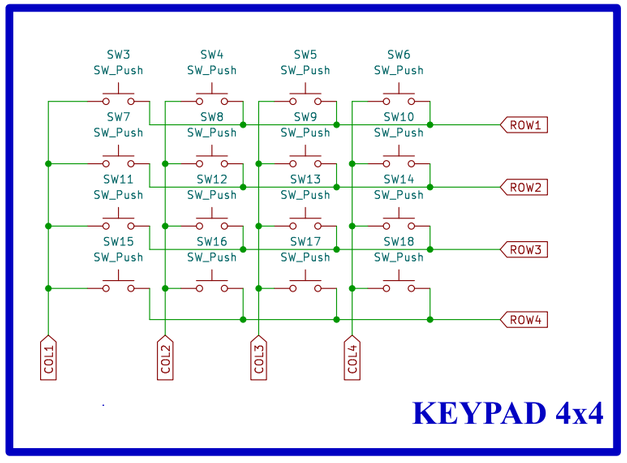

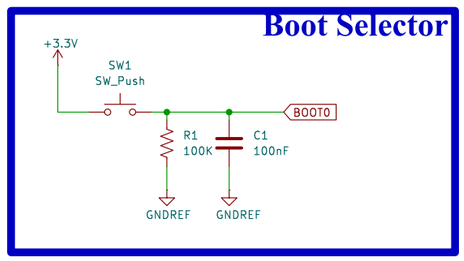

Ho Chi Minh University of Technology		
Sheet: /		
File: Calculator with keypad and LCD.kicad_sch		
Title:		
Size: A3	Date: 2026-03-21	Rev: v1.1
KiCad E.D.A. 9.0.7		Id: 1/1